Standards Compendium 2026

For engineering training and everyday use

Sixth edition 2026

preview

Publisher
Swiss Association for Standardization (SNV)
Sulzerallee 70, Postfach
8404 Winterthur
info@snv.ch
www.snv.ch

Swissmem Vocational Training
Brühlbergstrasse 4
8400 Winterthur
vertrieb.berufsbildung@swissmem.ch
www.swissmem.ch
www.swissmem-berufsbildung.ch

The Standards Compendium supports training in accordance with Swissmem's teaching and learning materials.

Copyright © 2026, Swissmem, Zürich

Project coordination
Joachim Pérez, Swissmem Vocational Training, Winterthur ZH

Layout and graphic concept
Daniel Baur, Swissmem Vocational Training, Winterthur ZH

Source cover picture
Casing element for low-voltage transformers
PFIFFNER Messwandler AG, 5042 Hirschthal / Switzerland

Print
Printed in Switzerland

ISBN 978-3-03866-553-3

Translation
Lucy Heller, Nussbaumen TG

For suggestions for improvement, corrections or comments
https://www.swissmem-berufsbildung.ch/feedback-tool

All rights reserved.
The work and all its parts are protected by copyright.
Any use other than as permitted by law requires previous written permission from the publisher.

Note
The Figures in this Standards Compendium illustrate the text. They do not represent examples of specific use. For this reason, the Figures are not completely dimensioned or toleranced. They illustrate only the relevant general principles. The Figures must not lead to any assumptions affecting any details, geometric elements or other notes, shown or not shown. In many Figures, drawing elements or other details have been removed, added or expanded so that the representation supports the text.

FSC
www.fsc.org
MIX
Paper from responsible sources
FSC® C007631

myclimate
neutral
Printed Matter
myclimate.org/01-21-366557

preview

FOREWORD

Technology constantly demands new and updated standards. This makes it necessary to continuously adapt the Standards Compendium. Since the publication of the fifth edition, a large number of standards have been updated. These changes to standards, as well as suggestions from trainers in the Swiss mechanical, electrical, and metal industry, have been taken into account in this edition.

The focus of this edition continues to be on the implementation of the ISO GPS system. Especially in the area of sample drawings.

The Standards Compendium was revised by the Swissmem and SNV author' group.

Authors group

Egon Fässler	Hagenbuch, ZH
Prof. Daniel Thommen	FHNW, Fachhochschule Nordwestschweiz, Hochschule für Technik und Umwelt, Windisch, AG
Willi Tschudi	Autor Swissmem-Fachmodule Swissmem, Aadorf, TG
Walter Zlauwinen	Zlauwinen Consulting, Biel/Bienne, BE
Candid Strebel	Swissmem Vocational Training, Winterthur, ZH
Steve Portoyan	PFIFFNER Schaltgeräte AG, Hirschthal, AG
Mathias von Flüe	Rheinmetall Air Defence AG, Zürich, ZH
Matthias Müller	FHNW, Fachhochschule Nordwestschweiz, Hochschule für Technik und Umwelt, Windisch, AG

Record

Sascha Hungerbühler	Swissmem Vocational Training, Winterthur, ZH

Technical support/proof reading

Jürgen Eixler	Vorsitzender Swissmem/NK3, Bossard AG, Zug, ZG
Thomas Katzensteiner	H. Wetter, Stetten, AG
Anja König	Dipl.-Ing. (FH), EWE/IWE, IWI-C, Schweizerischer Verein für Schweisstechnik (SVS), Basel, BS
Thomas Richter	Leiter Zertifizierung, TechnologieCentrum Kleben TC-Kleben GmbH, Übach-Palenberg, Deutschland
Bernard Roost	Swiss Association for Standardization (SNV), Winterthur, ZH
Markus Fischer	Buchs, AG

The undersigned thanks the above mentioned persons for their considerable efforts during the update of the Standards Compendium.

May 2026

Chairman of the authors group

Joachim Pérez
Swissmem Vocational Training, Winterthur ZH

preview

1.12.2 Comparison of the workpiece edges

a) With the ambiguous, indeterminate form in accordance with ISO 13715 (Fig. 63/1).

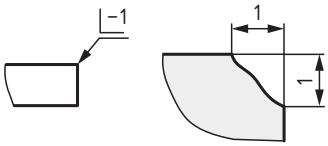

Fig. 63/1

b) With the unique GPS specification of the edge transition in accordance with ISO 21204 (Fig. 63/2).

Note
The standard ISO 21204 is not applicable to corners connecting three or more integral surfaces (Fig. 63/3).

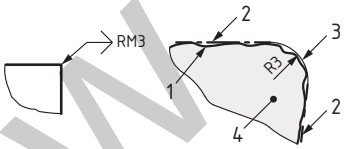

Key
1 Real workpiece/skin model
2 Adjacent reference sections
3 Restrictive minimum material boundary
4 Material side

Fig. 63/2

1.12.3 Symbols and meaning

The symbol consists of a reference line to the edge transition element with a dot (Fig. 63/3) or an arrow (Fig. 63/4) and a large 90° arrow at the right end of the reference line. The specification is made by letters and numbers; e.g. **C= chamfer, R = radius, E = ellipse, T = tolerance value, M = maximum material, P = profile defined by the CAD model**, etc. The nominal edge transition element shown alongside (Fig. 63/3 to Fig. 63/5) contains a chamfer of 0,5 mm with an angle of 30° in a tolerance zone of 0,1 mm symmetrically around the nominal profile (Fig. 63/6).

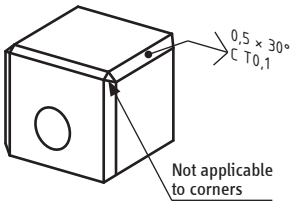

Fig. 63/3

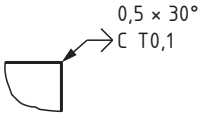

Fig. 63/4

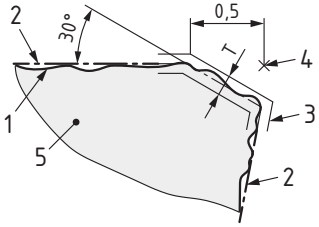

Key
1 Real workpiece/skin model
2 Adjacent reference sections
3 Tolerance zone
4 Specification origin
5 Material side
T Tolerance value for the transition tolerance

Fig. 63/6

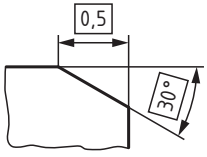

Fig. 63/5

Preview

1.20.8.1 Representation of the surface texture of matt surfaces

Matt surfaces must be specified by indicating the rms roughness ***Rq*** [1]).

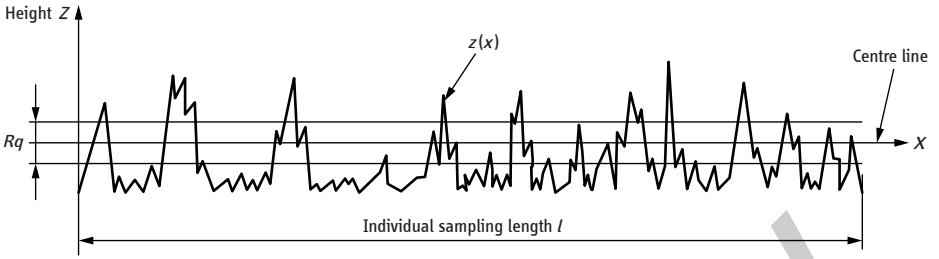

Fig. 106/1

This value depends on the range of spatial wavelengths considered. For this reason, it is often necessary to specify a lower and upper limit for the spatial band (range of spatial surface wavelengths). If no spatial band is specified, it is assumed that the spatial band is between 0.0025 mm and 0.8 mm.

Table 106/1 Examples of requirements for surface specifications on matt surfaces

Requirement	Example
Optical surface: – Matt surface Surface roughness: – A single, unilateral/upper specification limit – *Rq* ≤ 2 µm – Spatial band between 0,0025 mm and 0,8 mm	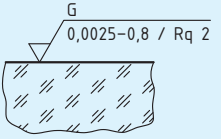
Optical surface: – Matt surface Surface roughness: – Bilateral specification limit – Upper specification limit *Rq* = 2 µm – Lower specification limit *Rq* = 0,05 µm – Upper limit of spatial band 5 mm	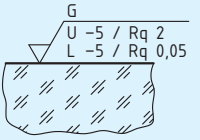

1) *Rq* = maximum permissible root mean square of the ordinate values *z*(*x*) of the roughness profile within the individual measuring section *l* (in µm).

preview

2.8.2.2 Symbols for modifiers

Table 185/1 Symbols for modifiers

Description	Symbol	Examples	Remarks
Modifiers for combining tolerance zones			
Separate zones	SZ	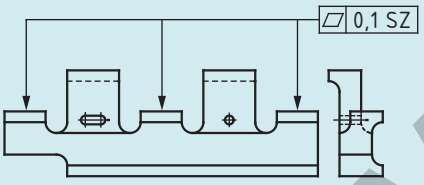	Addition “SZ” is not necessary here, due to independence in accordance with ISO 8015. See also Fig. 207/1.
Combined zone	CZ	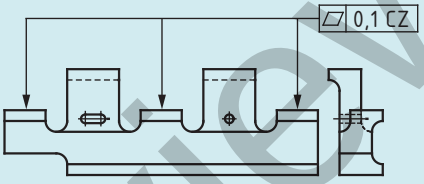	
Modifiers for unequal tolerance zones			
Specified tolerance zone offset (unequal zone)	UZ	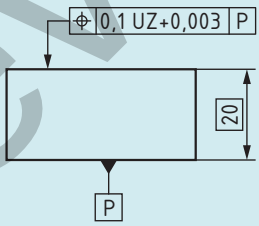	The center of the tolerance zone is shifted out of the material from TED dimension 20 by 0,003 mm. The “-” sign indicates the shift into the material.
Modifiers for constraints			
Unspecified linear tolerance zone offset (offset zone)	OZ	For flat surfaces and lines, it is better to use parallelism.	
Unspecified angular tolerance zone offset (variable angle)	VA	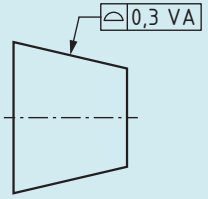	If the angle is not tolerated, the shape of the cone can be defined by a tolerance zone. This comprises the area between two coaxial conical surfaces with the same, unspecified angle, at a distance of 0,3 mm.

preview

– The drawing must refer to all models and data relevant to the product, including the revision history (Fig. 238/1).
– The labels displayed on the drawing must be interpretable without query, with the exception of model value queries to extract TED values.
– If the complete product definition is not included in the drawing, this must be noted in the drawing (Fig. 238/1).

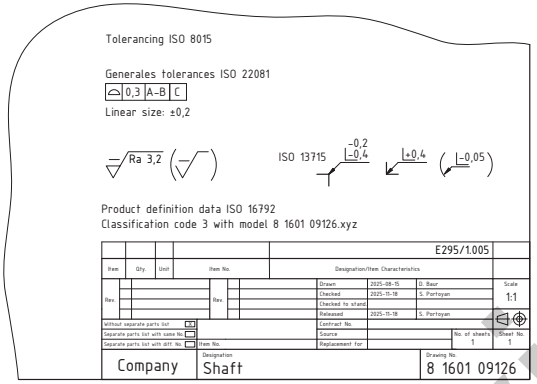

Fig. 238/1

2.10.7 Model structures

2.10.7.1 Selection filters in models

The display management must offer the option of activating or deactivating the display of annotations in whole or in part by means of filtering or selection (Fig. 238/2 and 238/3).

Without active filter

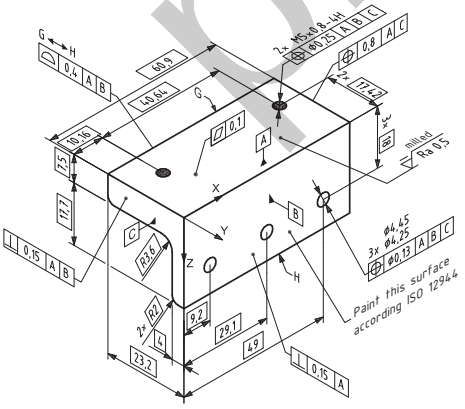

Fig. 238/2

With active filter

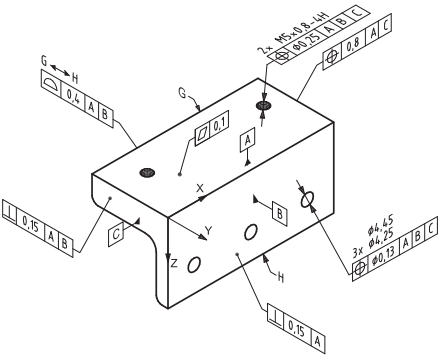

Fig. 238/3

preview

Among other things, filters can also identify and display specific functions or operations that either achieve a certain effect within the model or meet a specific requirement. This includes, for example, showing or hiding function-related annotations, inspection notes, production manufacturing information (PMI), or mass-relevant elements. Filtering makes it possible to display only content that is relevant to the intended use, such as manufacturing or inspection. This reduces the density of information and supports the targeted use of the 3D model. In addition, structured display can help to avoid misunderstandings and improve communication throughout the product lifecycle (Fig. 239/1).

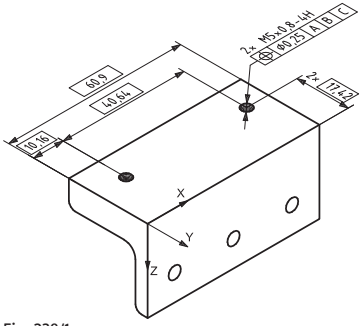

Fig. 239/1

2.10.7.2 Linking model features

Regardless of whether the geometry or the annotation is selected, the relationship between the model feature and its annotation must be maintained, including the following points:

– All annotations associated with selected geometries or model features must be highlighted or otherwise distinguished from other annotations when necessary (Fig. 239/2).

single feature

a feature of a pattern

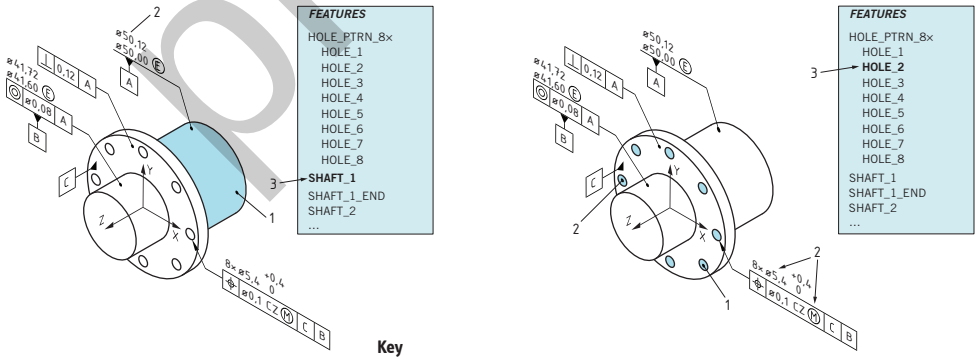

Fig. 239/2

Key
1 Query
2 Visual response
3 Feature name

preview

3.6.2.2 Active and passive corrosion protection

A distinction is made between active and passive corrosion protection. In active protection, an attempt is made to optimize the reaction of the corrosion partners (component and external conditions). Whereas in passive corrosion protection an attempt is made to separate the corrosion partners from each other.

Table 293/1 Corrosion protection

Corrosion protection				
Passive corrosion protection				Active corrosion protection
Metallic coatings	Non-metallic coatings			
	Passive coatings	Organic coatings	Inorganic coatings	
Galvanizing Plating Hot dip galvanizing	Anodic oxidation Burnishing Phosphating	Plastic coatings Oil paints Lacquers	Enameling	Material selection, Alloy formation, Addition of inhibitors, Adjustment of pH value, Cathodic protection, Corrosion-compatible material design

Note
This table only shows some typical examples. It is not exhaustive.

3.6.2.3 Structural design

Structural design is the manner in which a structure is designed, considering corrosion protection according to a detailed design plan.

Corrosion protected shape design of structural parts (Fig. 293/1):
– Simplification of shapes
– Observance of the installation position of plates and profiles
– Avoidance of the possibility of moisture and dirt deposits
– Avoidance of abrupt changes in cross-sections
– Avoidance of internal and external stresses
– Structural avoidance of penetration of corrosion-promoting substances into the active medium

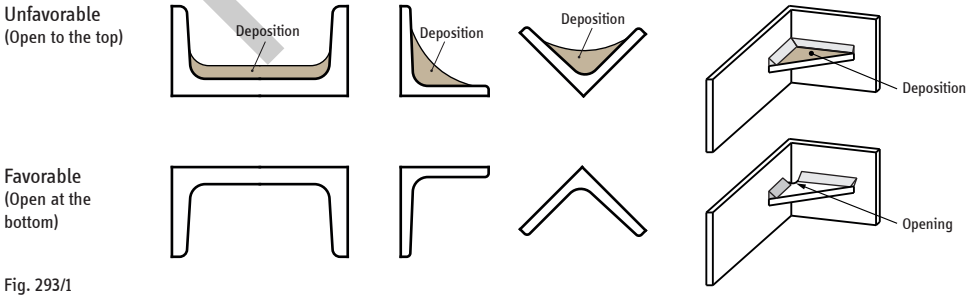

Fig. 293/1

preview

4.14.3 Circlips (retaining rings) for bores (DIN 472)

Designation example for d_1 = 28 mm, s = 1,2 mm:

Circlip DIN 472-28×1,2

Material: Spring steel C67S, C75S or special steel 1.4122
Hardness: 470 ... 580 HV for $d_1 \leq 48$
435 ... 530 HV for $d_1 \geq 48$

t = Nominal dimension of groove depth ($\frac{d_2 - d_1}{2}$)

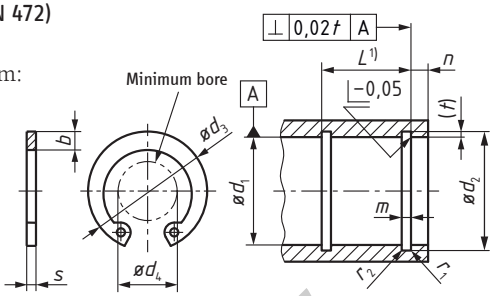

Fig. 344/1

Notes on use

Surface roughness values for the groove base and loaded flanks must be defined on a case-by-case basis. A rectangular shape is considered the standard design for the groove base. The rounding r_1 on the load side must not exceed 0,1× s. For grooves that are only slightly wider than the ring thickness, the radius r_2 on the side away from the load must correspond to the radius r_1. With a sharp-edged rectangular groove, a corresponding notch effect factor must be taken into account due to the notch sensitivity of the respective material.

Table 344/1 Sizes for circlips for bores Dimensions in mm

Nominal dimensions			Ring			Groove				Load bearing capacity F_N of groove
Shaft diameter	Ring thickness		b	d_3	d_4	d_2		m 2)	n	kN
d_1	s	Tol.	≈			Tolerance		H13	min.	max.
28	1,2	0 -0,06	2,9	30,1	17,9	29,4	+0,21/0 (H12)	1,3	2,1	10,5
30			3	32,1	19,9	31,4			2,1	11,3
32			3,2	34,4	20,6	33,7			2,6	14,6
35	1,5		3,4	37,8	23,6	37	+0,25 0 (H12)	1,6	3	18,8
37			3,6	39,8	25,4	39				19,8
40	1,75		3,9	43,5	27,8	42,5		1,85	3,8	27
42			4,1	45,5	29,6	44,5				28,4
45			4,3	48,5	32	47,5				30,2
47			4,4	50,5	33,5	49,5				31,4
50	2	0 -0,07	4,6	54,2	36,3	53	+0,30 0 (H12)	2,15	4,5	40,5
52			4,7	56,2	37,9	55				42
55			5	59,2	40,7	58				44,4
60			5,4	64,2	44,7	63				48,3
62			5,5	66,2	46,7	65				49,8
65	2,5		5,8	69,2	49	68		2,65		51,8
68			6,1	72,5	51,6	71				54,5
70			6,2	74,5	53,6	73				56,2
72			6,4	76,5	55,6	75				58
75			6,6	79,5	58,6	78				60
80			7	85,5	62,1	83,5			5,3	74,6
85	3	0 -0,08	7,2	90,5	66,9	88,5	+0,35 0 (H12)	3,15		79,5
90			7,6	95,5	71,9	93,5				84
95			8,1	100,5	76,5	98,5				88,6
100			8,4	105,5	80,6	103,5				93,1
110	4	0 -0,1	9	117	88,2	114	+0,54 0 (H13)	4,15		117
115			9,3	122	93	119				122
120			9,7	127	96,9	124	+0,63 0 (H13)		6	127
125			10	132	101,9	129				132
130			10,2	137	106,9	134				138
140			10,7	147	116,5	144				148
145			10,9	152	121	149				153
150			11,2	158	124,8	155			7,5	191

1) Dimension L is a usual functional dimension.
2) Where axial loading of the circlip is in only one direction, the groove width m and the tolerances can be larger.

preview

Table 378/1 Format of steel names for steels in category 1

Principal symbol		Additional symbols for steel		for steel products
Letter	Mechanical properties		Group 2 [1]	
S Structural steel [2]	Min. yield strength (R_e) in N/mm² for the smallest thickness range	Impact energy in joules: 27 J / 40 J / 60 J; Test temperature °C: JR / KR / LR / +20; J 0 / K 0 / L 0 / 0; J 2 / K 2 / L 2 / −20; J 4 / K 4 / L 4 / −40 **G** = Other characteristics followed, where necessary, by 1 or 2 digits, e.g. G1 rimming steel	**C** = Special cold forming **H** = Hollow section **W** = Weather resistant	Table 377/1
E Engineering steels [2]		**G** = Other characteristics followed, where necessary, by 1 or 2 digits, or where impact properties are specified, as in the above Table.	**C** = suitable for cold drawing	
P Steels for pressure purposes [2]		**N** = Normalised or normalised rolled **G** = Other characteristics followed, where necessary, by 1 or 2 digits	**H** = High temperature **R** = Room temperature **L** = Low temperature	
D Flat products for cold forming	**C** = cold rolled **D** = hot rolled **X** = where rolled condition not specified (followed by 2 symbols)	**H** = hollow section **T** = tube	No additional symbol	

Designation examples

Structural steel: **S235JRC+C**

S235 (principal symbol)
S = **steels for structures**
235 = **minimum yield strength in N/mm²**
JR = **notched bar impact energy 27 J at 20 °C** (additional symbol group 1)
C = **special cold workability** (additional symbol group 2)
+C = **cold work hardened** (treatment condition see Table 377/1)

Fine grain steel suitable for welding, Normalized for low temperatures (EN 10025-3): **S355NL**

S355 (principal symbol)
S = **steels for structures**
355 = **minimum yield strength in N/mm²**
N = **normalized** (additional symbol group 1)
L = **for low temperatures** (additional symbol group 2)

Steel for general engineering uses (SN EN 10293): **GE200**

GE200 (principal symbol)
G = **Letter for cast steel**
E = **Steel type: Engineering steel**
200 = **Minimum yield strength in N/mm²**

1) Additional symbols in Group 2 shall only be used in conjunction with symbol of Group 1.
2) For steel castings the name is preceded by the letter G.

preview

5.7.2 Design and tolerances of shapes

Plastic molded parts require significantly greater tolerances than machined metal workpieces. The corresponding tolerance indications are defined in the ISO 20457 standard. See Section 2.7.8. Information on the design of molded plastic parts and special features to be observed during processing can be found in the guidelines of the relevant processing companies.

5.7.3 Designation system and basis for specifications for injection molding and extrusion

The SN EN ISO 16396-1 standard uses the example of polyamide (PA) molding compounds to illustrate the basis for the complete specification of thermoplastics.

Table 435/1 Standard form for the designation system for thermoplastics

Designation						
Description block	**Identity block**					
Thermoplastics (optional)	International Standard Block	Characteristics Block				
		Data Block 1	Data Block 2	Data Block 3	Data Block 4	Data Block 5

Table 435/2 Example of a polyamide (PA) molding compound

Designation										
Description block (optional)	**Identity block**									
Thermo-plastics	ISO Stand-ard	Individual-item block								
		Data Block 1		Data Block 2			Data Block 3		Data Block 4	Data Block 5
		Polymer		Performance and origin			Application and processing		Properties	Additional information
		Type	Additive	Filler	Flame retardant	Recyclate	Processing	Characteristics		
	16396	PA 6	P	(GF+MD) 25	FR(30)	(R50)	M	A	S14-060	

For details on the data blocks, see SN EN ISO 16396-1.

The above example (Table 435/2) should be interpreted as follows:

Data block 1 Pos. 1: Identification of the plastic by its abbreviation **PA** in accordance with SN EN ISO 1043-1 and information on the chemical composition **6** C atoms

Pos. 2: Information on the use of plasticizers **P** or impact modifiers **I**.

preview

Table 447/2 Control valves (continued)

Name and explanation	Symbol
3.4.2 Pressure limiting valve (safety valve) Inlet pressure works against a counter force (e.g. a spring) to open the exit to a vessel or to the atmosphere.	
– With pilot control Inlet pressure is limited (as above or with pilot control).	
3.4.3 Differential pressure valve The inlet pressure is limited by a differential pressure pilot (table 450/1, Section 5.2.4).	
3.4.4 Follower valve When the inlet pressure is higher than the counter force from the spring, the valve opens and allows flow to the outlet port.	
3.4.5 Pressure control valve or pressure reduction valve (pressure reducer) Unit with variable inlet pressure which delivers an essentially constant outlet pressure, provided the inlet pressure is higher than the required outlet pressure. – Without relief opening	
– Without relief opening, with remote operation As above but the outlet pressure depends on the pilot pressure.	
3.4.6 Pressure difference regulating valve: The outlet pressure is reduced by a set value which depends on the inlet pressure.	
3.5 Flow control valves	
Unit which ensures control of flow; positions and methods of representation as in Section 3.4	
3.5.1 Throttle valve Simplified symbol (without information about type of actuation or state of the valve).	
– With manual actuation Full symbol (with information about type of actuation or state of the valve).	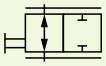
3.5.2 Flow regulator (simplified representation) Changes in inlet pressure have no influence on the flow rate. – With constant outlet flow	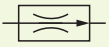
– With constant outlet flow and relief opening to vessel As first symbol under 3.5.2, but with the excess flow led away.	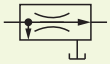
– With variable outlet flow As first symbol under 3.5.2, but with arrow according to 1.2.3 added to the throttle symbol.	
3.6 Shut-off valve	
(Simplified symbol)	

Table 449/1 Energy transfer and processing

4.1 Sources of energy	
Name and explanation	Symbol
4.1.1 Source of pressure – Pneumatic source of energy	
– Hydraulic source of energy	
4.2 Flow lines and connections	
4.2.1 Lines – Supply line, return line	
– Pilot (control) line, drain or leak line	
– Flexible connecting line Flexible hose, usually for connecting moving parts	
– Electrical line	
4.2.2 Piping connection	
4.2.3 Crossing piping, not connected	
4.2.4 Deaeration	
4.2.5 Outlet opening – without connection arrangements	
– with thread for connection	
4.2.6 Energy connections On equipment or piping for energy removal or measuring – with plug	
– with removal piping	
4.2.7 Quick action couplings Connected, without mechanically opening non-return valve	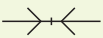
4.2.8 Silencer	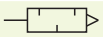

preview

7.2.1.2 Data fields in the title block

The standard SN EN ISO 7200 adopts the basic principle for handling digitized documents. The number of data fields in the title block (see Fig. 479/1) has been kept to a minimum. Other data fields, on the other hand, are handled dynamically and are only indicated outside the title block when necessary. Table 480/1 below lists all terms with their requirements and notes.

Table 480/1 Requirements for data fields

Field name	Language-dependent	Recommended number of characters	Commitment	Note
Legal owner	–	Not specified	Mandatory	Company logo also possible
Item number	No	16	Mandatory	Must be unambiguous
Change index	No	2	Optional	Letter or number, avoid letters I and O
Issue date	No	10	Mandatory	Legally relevant
Section/sheet number	No	4	Mandatory	≠ Page number
Number of sections/sheets	No	4	Optional	≠ Number of pages
Language code	No	4 per language	Optional	Based on ISO 639
Title	Yes	25 to 30 [2])	Mandatory	Avoid abbreviations
Additional title	Yes	2x 25 to 30 [2])	Optional	Avoid abbreviations
Responsible department	No/Yes [1])	10	Optional	Organizational unit
Technical reference	No/Yes [1])	20	Optional	Contact person within the company
Approving person	No/Yes [1])	20	Mandatory	Can also be several persons
Creator	No/Yes [1])	20	Mandatory	Person who drafted or revised the document
Document type	Yes	30	Mandatory	Based on ISO 29845 [2])
Classification/keywords	No/Yes [1])	Not specified	Optional	Text or identifier
Document status	Yes	20	Optional	Reflects the life cycle of the document
Page number	No	4	Optional	≠ Sheet number
Number of pages	No	4	Optional	≠ Number of sheets
Paper size	No	4	Optional	e.g. A4

Note

For modern information management, it is recommended to use data fields with an unambiguous language code in accordance with ISO 639. Using a language code (consisting of two or three letters) instead of the name of a language has many advantages, as some cultures may have different names for the same language, while some languages may have the same or similar names even though they are not related to each other.

Further information, including access to language code databases, can be found here: https://www.iso.org/iso-639-language-code

1) «Yes» to support the display of different types of alphabets.
2) To support languages such as Japanese, which require two bytes per letter.

preview

Table 522/1 Minimum requirements regarding the technological competences, knowledge and experiences in adhesive bonding technology for the adhesive bonding coordinators (ABCs) and deputies

Scope of work	Comments	Class S1	Class S2		Class S3	Class S4
Release of development-phase (pre-production) product and process designing		Level 1	Level 1 for product design **with** calculation/ validation	Level 2 for products **without** calculation/ validation	Level 2	to be defined by the user-company
Supervision of production/ manufacturing (in-production and maintenance/repair (post-production) without any process changes outside the defined process definition	In case of new or redesign and/or new processes or process changes go back to first line of this table	Level 2	Level 2		Level 3	to be defined by the user-company
Involvement of ABC in purchase, sales, assembly and sub-contracting of adhesively bonded components and adhesive bonding work	The supply chain shall be a closed loop in a traceable way to ensure that every contract partner has the necessary competences	Level 2	Level 2		to be defined in the technical specifications	to be defined by the user-company

7.9.4 Design and verification of adhesive joints

The size of the adhesive surfaces, their location, the distribution and the mass of the adhesive between the joint parts after the adhesive has set, must be specified and documented. Verification is a procedure used to prove that an assembly or component meets the requirements.

For adhesive joints in safety classes S1 and S2, at least one of the following verification methods must be used.

The verification can be carried out in four ways:
1. Verification that the stresses are lower than the stress resistance.
2. Component testing/component testing
3. Documented experience
4. Combination of methods 1 to 3

Verification must not only refer to strength or stability under operating conditions. It must also include aspects such as adhesion, chemical resistance, and stress during manufacture.

preview

8.2 DRAWING EXAMPLES

8.2.5 Shafts with different specification designs

8.2.5.1 Shaft in accordance with ISO 2768-1, -2 (explanations on page 536)

(Length dimensions ISO 2768-1 and geometric tolerances ISO 2768-2)

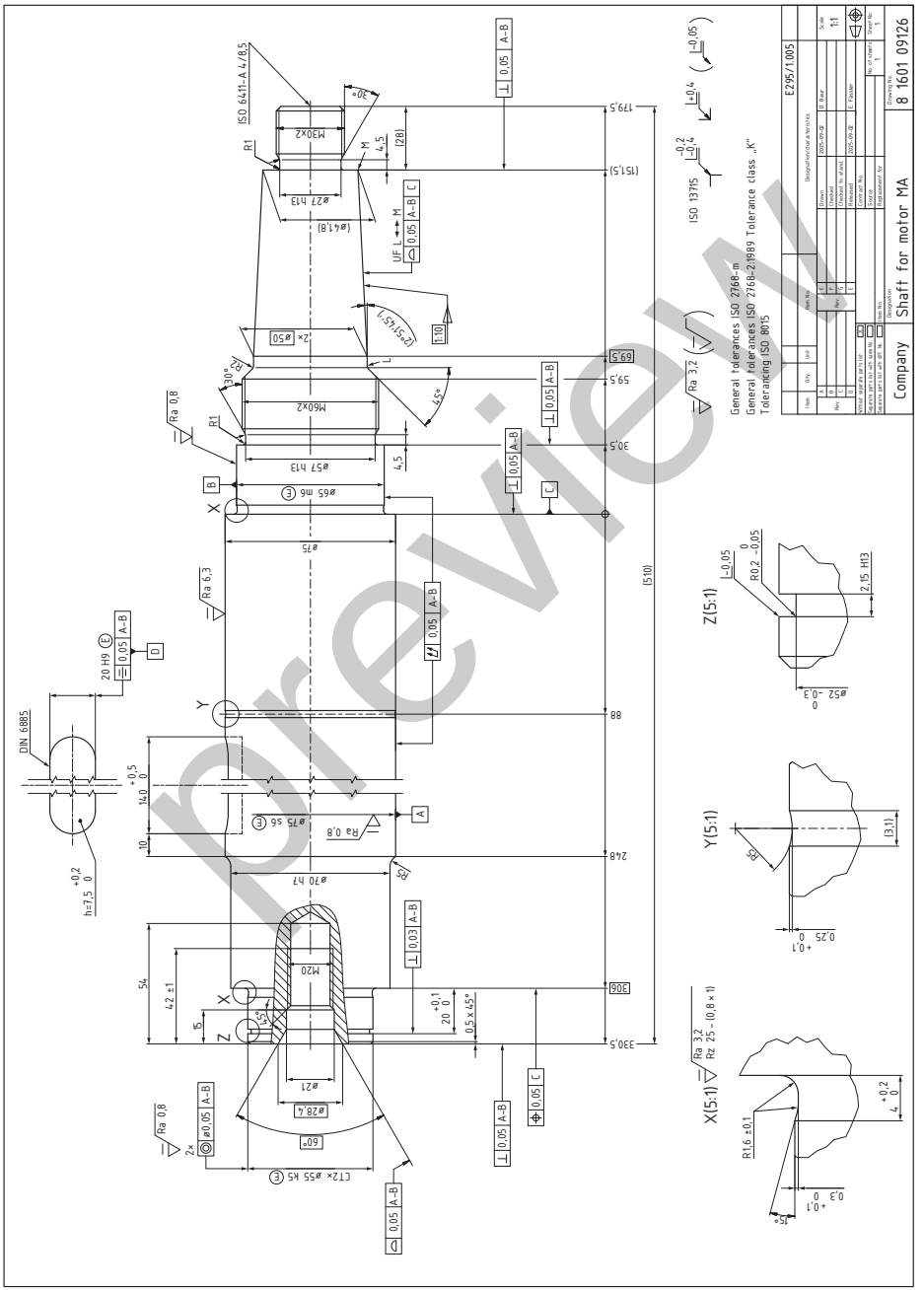

8.2.5.2 Shaft in accordance with ISO 22081 (explanations on page 537)

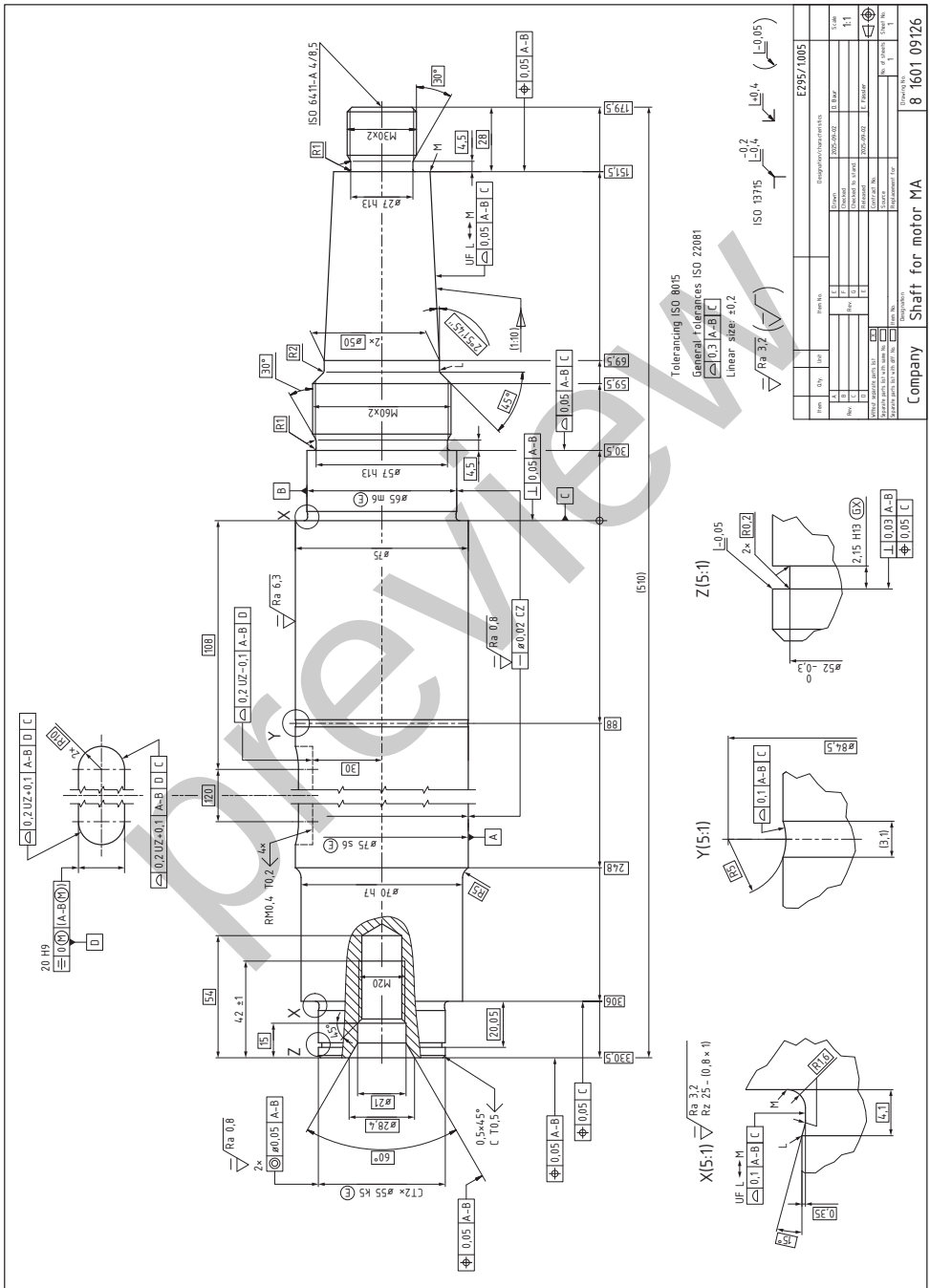

9.1 Index of standards

9.1.1 Introduction

The following applies for all the standards described in this seventh Edition of the Standards Compendium:
– The "Year" is the date of publication of the standard as used in this edition of the Compendium.

9.1.2 Swiss standards (SN)

Swiss standards are issued, depending on the subject matter, by the respective specialist branch (FB) or the Interdisciplinary Standards Group (INB) 1.2.4.

Note
Until 1977, standards in the specialist area "Machinery, metals and synthetics industry" had the designation "VSM".

SN ISO standards have the same technical content as ISO standards and which have been adopted nationally and translated. As appropriate, they are published in German, German/French or German/ French/English.

The French version is the same as the original ISO French version.

SN EN or SN EN ISO standards are EN standards which have been nationally adopted according to the contractual agreement between CEN/CENELEC and its members (see also paragraph 1.2.4)

Table 602/1 contains standards of the areas:
– FB [1]) «Swiss Mechanical and Electrical Engineering Industries»
– FB «Electrical Engineering»
– INB «Interdisciplinary sector»

Note
Standards which are not prepared in a specific specialist area, for example because the standard applies to several specialist areas, are prepared by the INB and published by the Swiss Association for Standardization (SNV).

Table 602/1 Swiss standards

Number	Year	Page(s)
SN 012110	1995	17
SN 214001	2010	154, 280, 281, 282, 286
SN 237550-1	1980	285
SN 500400	2000	539
SN EN 485-1	2016	417
SN EN 485-2+A1	2019	417
SN EN 485-4	1995	420
SN EN 515	2017	418, 419
SN EN 573-1	2005	418, 419, 422
SN EN 573-2	1995	418, 419, 422
SN EN 573-3+A2	2014	417, 420, 423
SN EN 573-5	2007	418, 420
SN EN 586-1	1998	417
SN EN 586-2	1995	417

Number	Year	Page(s)
SN EN 586-3	2001	154, 420
SN EN 601	2004	417
SN EN 602	2004	417, 428
SN EN 614-1+A1	2009	488
SN EN 754-1	2016	417
SN EN 754-2	2024	417
SN EN 755-1	2016	417
SN EN 755-2	2025	417
SN EN 923	2016	272, 273
SN EN 1011		244
SN EN 1090		291, 506, 509
SN EN 1090-1+A1	2011	510
SN EN 1090-2+A1	2024	510, 511, 583
SN EN 1090-3	2019	510
SN EN 1090-4	2018	510

1) FB = Specialized division

preview